3000 Series piggyback filters / regulators

3/4" and 1" Ports

Technical data	
	METAL / METAL W/ SIGHT GLASS
Max inlet pressure (psi)	250
Temperature range (F)	23 – 175
Spring range options (psi)	0 – 30
	0 – 60
	0 – 140
	10 – 175
Bowl cap — manual drain (oz)	5.3
Bowl cap — auto drain (oz)	5.9
Gauge port	1/8"
Flow capacity — 3/4" port*	236 scfm
Flow capacity — 1" port*	250 scfm

**Inlet pressure 100 psi (6.9 bar), 90 psi set (6.2 bar), with 33 psi drop (2.3 bar)*

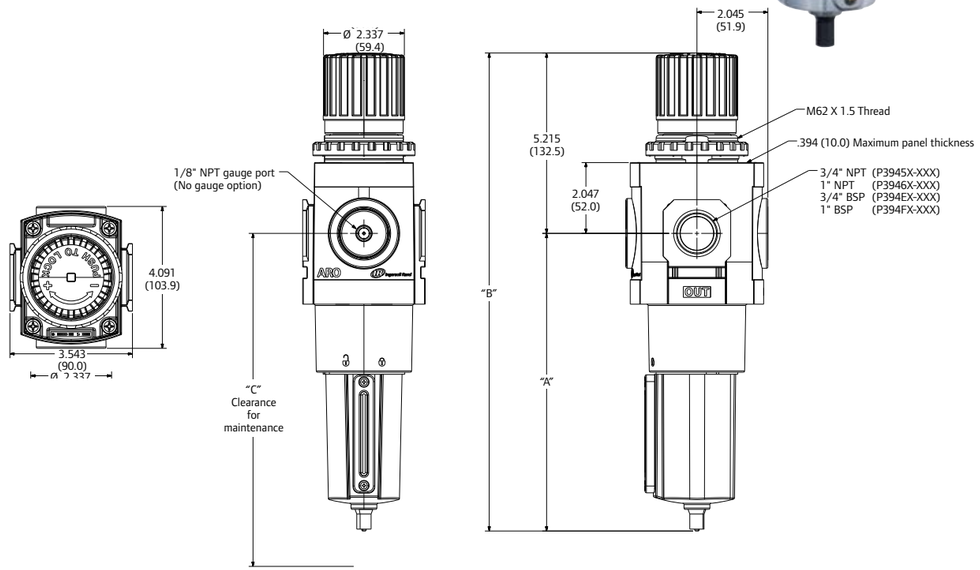

MODEL	A (MM)	B (MM)	C (MM)	DRAIN
P394XX-XX0	8.425 (214.0)	13.642 (346.5)	10.925 (277.5)	MANUAL
P394XX-XX4	9.472 (240.6]	14.689 (373.1)	11.972 (304.1)	AUTOMATIC

How to order

To configure the desired part number, use the chart below to select the port size, thread type, and configuration options.

Port size / Base model

3/4" - P394 5 X - X X X
1" - P394 6 X - X X X

Note: Some menu combinations not available. Please consult price book to verify. Popular options are shown in **red** below.

Filter element
- **4** 5-Micron

Thread type
- **5** 3/4" NPT
- **6** 1" NPT
- **E** 3/4" BSP
- **F** 1" BSP

Pressure range PSIG
- **1** 0 – 140 (no gauge)
- **2** 0 – 60 (no gauge)
- **3** 10 – 175 (no gauge)
- **4** 0 – 30 (no gauge)
- **6** 0 – 140 w/ flush-mount gauge

Relieving bowl option
- **1** Relieving / metal w/ sight glass
- **2** Relieving / metal

Control / drain option
- **0** Standard knob / manual
- **4** Standard knob / automatic

3/4" Pressure drop test

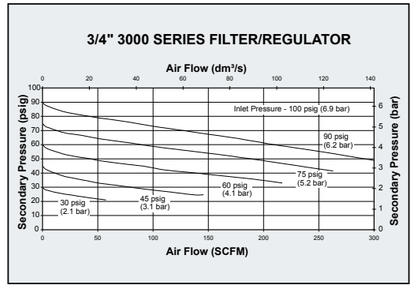

See page 77 for additional flow charts

Popular configurations

Port size NPT	Drain	Spring range psi	w/ Gauge	Model
5 MICRON • METAL BOWL W/ SIGHT GLASS • RELIEVING				
3/4"	Manual	0 – 140	Yes	P39454-610
3/4"	Auto	0 – 140	Yes	P39454-614
1"	Manual	0 – 140	Yes	P39464-610
1"	Auto	0 – 140	Yes	P39464-614

Replacement parts

MODEL	DESCRIPTION
104445	5-Micron element
104446	40-Micron element
104450	Metal bowl w/ sight glass, man.
104451	Metal bowl w/ sight glass, auto
104452	Filter bowl service kit
104453	Regulator service kit (relieving)
104454	Regulator service kit (non-relieving)
104455	Tamper kit
104456	0 – 60 psi Spring
104457	0 – 140 psi Spring
104458	10 – 200 psi Spring
104315	Replacement auto drain
104316	Replacement manual drain
104322	Metal bowl, manual drain
104323	Metal bowl, auto drain
104334	0 – 140 psi Gauge flush mount
104337	Metal bowl
104338	Metal bowl w/ sight glass